Assembly Instructions:

Deluxe Profile Leg Steel Frame Table

Time Required:

25 minutes

Tools Required:

Screwdriver, Electric Drill, Pencil, Measuring tape/Ruler
*Tools are not included.

Skill Required:

Easy  Hard

The Assembly Skill Rating is a 5-point system that shows the degree of effort needed in assembling a specific product. With 1 being easy for the average person and 5 requiring an expert.
For most products, two persons are recommended.

Please note, as this is a commercial product, some intermediate skills are required.
*No pre-drill holes or markings are provided on tops.

NOTE

- As this is a commercial product, some intermediate skills may be required.
- No pre-drill holes or markings are provided on our table or desk tops.
- Please check you have all hardware before assembling.
- If you are missing any hardware, please contact your Rapidline reseller. Please ensure you have the name of the item, required hardware part and quantity.
- Please retain your receipt as proof of purchase to validate your warranty.
- Assemble on a clean, flat, smooth surface such as a rug or carpet to avoid parts from being scratched.
- Remove all wrapping materials, including staples and packing straps before you start to assemble
- Keep all hardware parts out of reach of children.

CAUTION

- Heavy product. Do not attempt to lift or move without help
- Do not tighten screws and bolts until completely assembled.
- Do not use this product unless all bolts and screws are firmly secured and tightened.

WARNING

- If parts are missing, broken, damaged or worn stop using the product until all repairs are made.
- Failure to follow these warnings could result in serious injury.

bdo furniture

Assembly Instructions

MODEL NO: Profile Leg Steel Frame Table

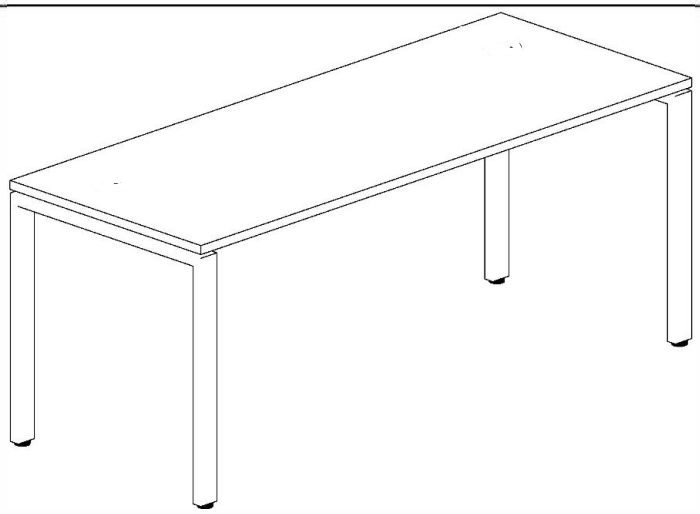

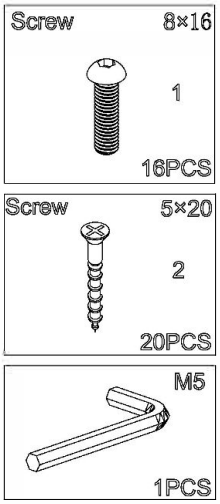

STEP1

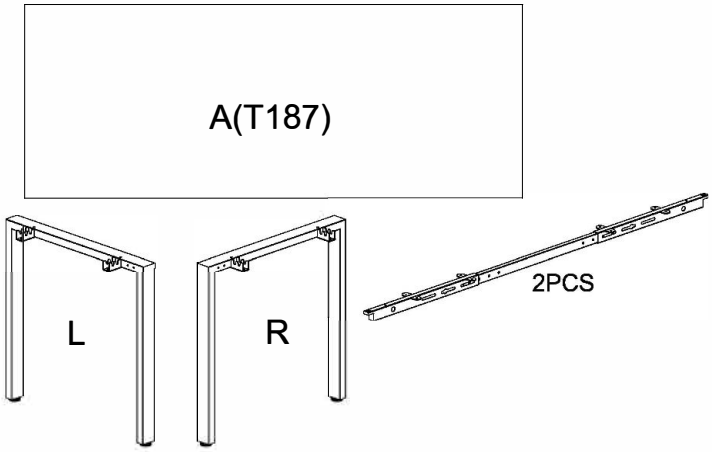

STEP2

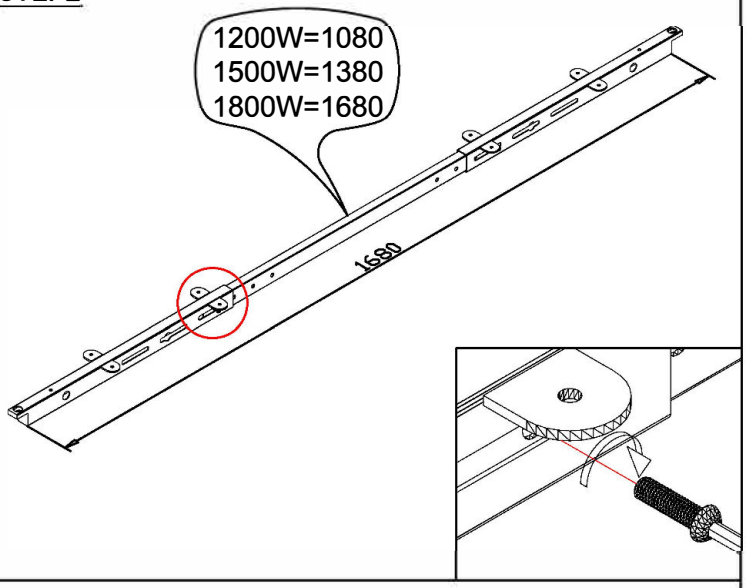

STEP3

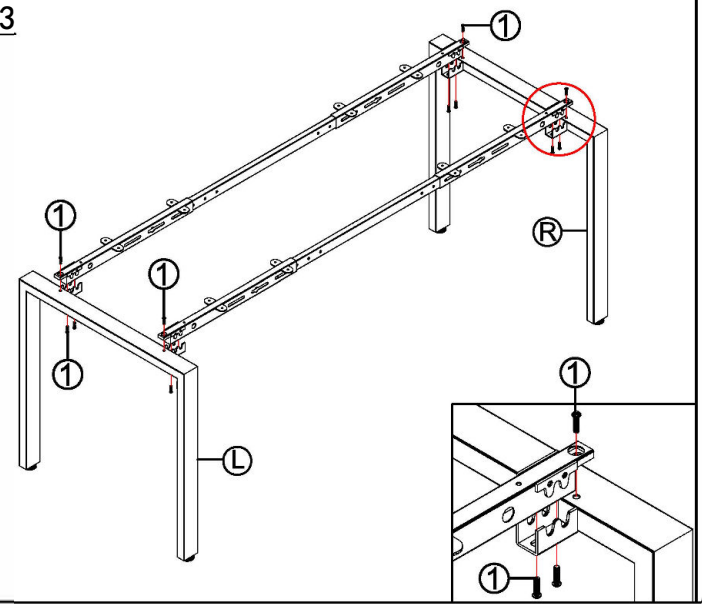

STEP4

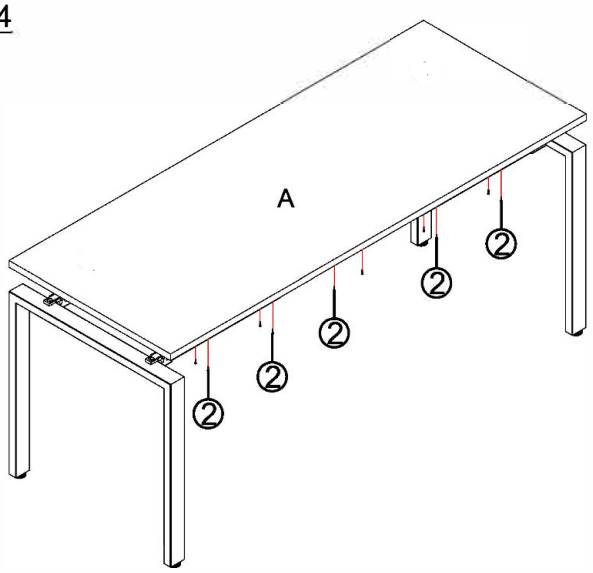

IMPORTANT NOTE:

- Place all laminated parts on a clean and smooth surface such as a rug or carpet to avoid the parts from being scratched.
- Check to be sure that you have all parts and hardware.
- Remove all wrapping materials,including staples & packing straps before you start to assemble.
- Don't tighten all screws/bolts until all completely assembled.
- Keep all hardware parts out of reach of children

